

TECHNICAL DATASHEET

TAB POLAR BLUE B75H

ORDER INFORMATION

TAB ID
1000341

Short Code
B75H

DIN Marking
57549 B

EAN Code
3838807021105

Quantity per EU/CNT pallet
51/80 pcs

TECHNICAL INFORMATION

Voltage (V)
12

Capacity C20 (Ah)
75

CCA -18°C EN (A)
700

RC (min)
136

LxWxH (mm)
278x175x190

Total Weight (kg)
17.2

TECHNOLOGY

Primary Function
Engine Start

Battery Technology
Flooded

Grid Type (pos/neg)
Expanded/Concasted

Grid Alloy (pos/neg)
Ca/Ca

Separator
PE

Electrolyte (g/cm3)
1,28

BOX DESIGN

Box Type
L3

Cover Type
Kamina

Colour
Blue

Layout
0

BHD
B13

Terminal
1

DRAWING

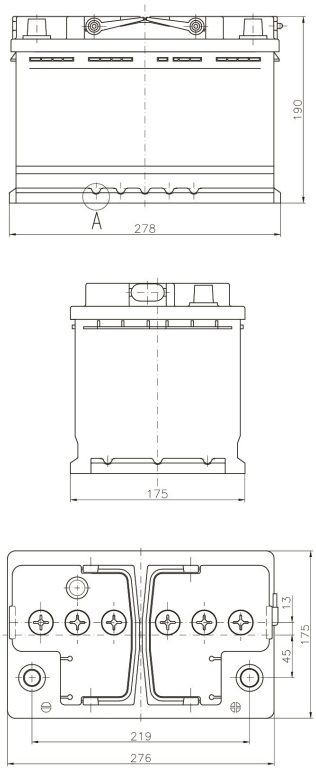

BHD

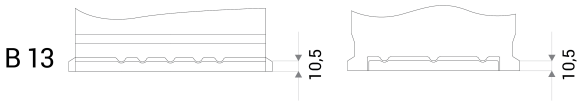

LAYOUT

0

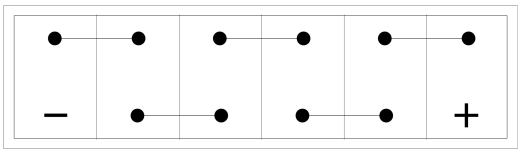

TERMINAL

1

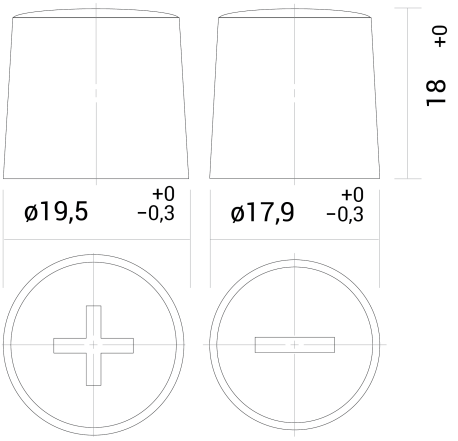

TECHNICAL DATASHEET

TAB POLAR BLUE B75H

TAB d.d, Polena 6, SI-2392 Mežica, Slovenia, www.tab.si