

TECHNICAL DATASHEET

TAB POLAR BLUE B66

ORDER INFORMATION

TAB ID
1000340

Short Code
B66

DIN Marking
56649 B

EAN Code
3838807021051

Quantity per EU/CNT pallet
63/90 pcs

TECHNICAL INFORMATION

Voltage (V)
12

Capacity C20 (Ah)
66

CCA -18°C EN (A)
620

RC (min)
112

LxWxH (mm)
242x175x190

Total Weight (kg)
15.0

TECHNOLOGY

Primary Function
Engine Start

Battery Technology
Flooded

Grid Type (pos/neg)
Expanded/Concasted

Grid Alloy (pos/neg)
Ca/Ca

Separator
PE

Electrolyte (g/cm3)
1,28

BOX DESIGN

Box Type
L2

Cover Type
Kamina

Colour
Blue

Layout
0

BHD
B13

Terminal
1

DRAWING

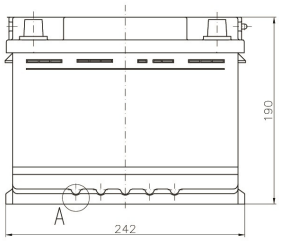

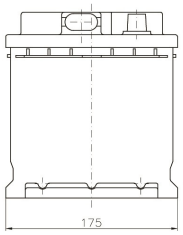

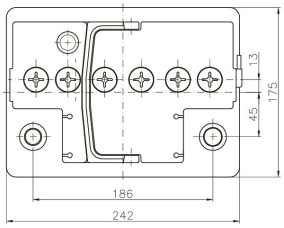

BHD

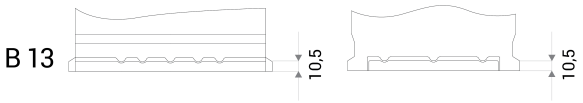

LAYOUT

0

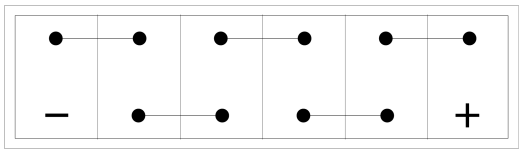

TERMINAL

1

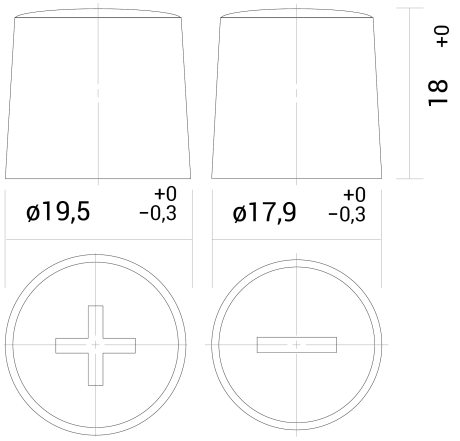

TECHNICAL DATASHEET

TAB POLAR BLUE B66

TAB d.d, Polena 6, SI-2392 Mežica, Slovenia, www.tab.si